SUBMERSIBLE LEVEL TRANSMITTER

"Hydrostatic Liquid Level Measurement"

PTL 110

GENERAL FEATURES

- Piezoresistive measurement principle
- Long-term stable operation
- EMC and Reverse Polarity protection
- 4-20 mA or 0-10 V analog output
- Different level measuring between 1 meter and 100 meters
- IP68 protection class
- High quality
- Immediate delivery from stock
- Reasonable price, economical solution

PTL 110 level pressure sensors with piezoresistive working principle; are used for level measurement in applications like streams, reservoirs, water and fuel tanks etc. With its stainless steel housing with IP68 protection class, it can work in harsh environments.

Thanks to the surge voltage and reverse polarity protection, the PTL 110 series is unaffected by electrical fluctuations and reverse connections.

Optionally configurable pressure ranges, analog output and mechanical connection options offer solutions suitable for various applications.

TECHNICAL SPECIFICATIONS

Supply Voltage	12 … 30 VDC
Measuring Principle	Piezoresistive
Membrane	1.4435 (316L)
O-Ring	NBR(std.) / EPDM(opt.) / Viton(opt.)
Measuring Range	Different models between 100 mbar and 25 bar can be selected
Maximum Pressure	%200 FS
Precision	%0,3
Electrical Connection	3 x 0,22 mm^2 shielded cable Cable outer diameter: 7,5 ±0,2 mm Drain pipe diameter: 2 mm (Cable length according to level value)

Output Signal	4…20 mA (2 wire) 0…10 VDC (3 wire)
Operating Temperature	-25°C… +85°C
Storage Temperature	-25°C… +85°C
Protection Class	IP68
Material	Body: 1.4435 (316L stainless steel)
	Cable: PE (polythene)
Weight	~350 gr
EMC Protection	Emission: EN/IEC 61000-6-3
	Immunity: EN/IEC 61000-6-2

ELECTRICAL CONNECTION

4-20 mA Connection

Signal	Cable
+12…30 VDC (+ supply)	Red
4-20 mA	Black

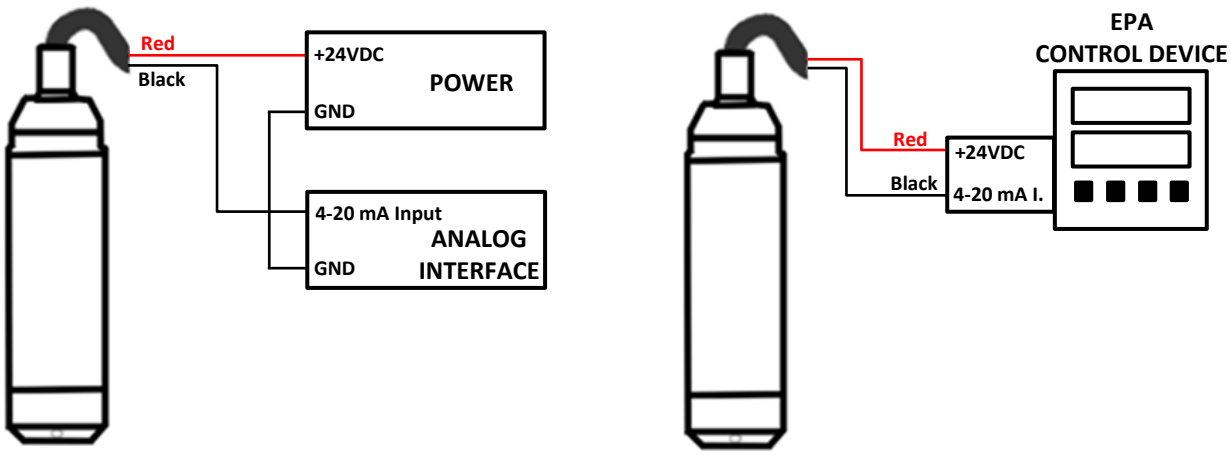

0-10 VDC Connection

Signal	Cable
+12…30 VDC (+ supply)	Red
GND	Black
0-10 VDC	Yellow

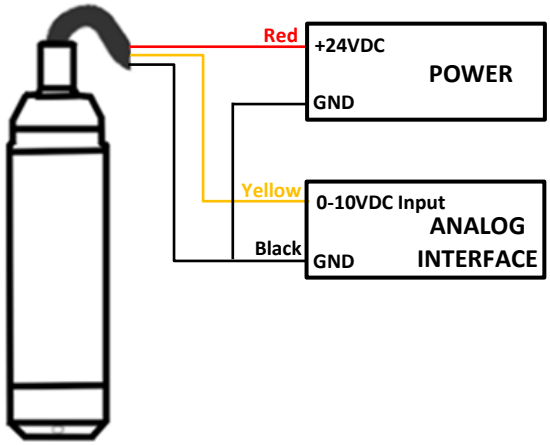

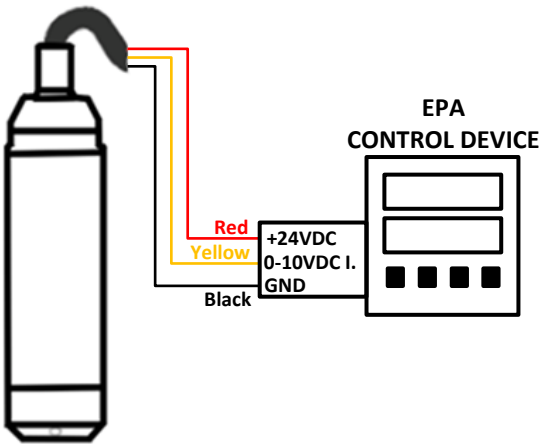

SAMPLE APPLICATION

During the application, the product free submerge.Dams, rivers and streams of the product against a surge in applications should be suspended through the pipes.

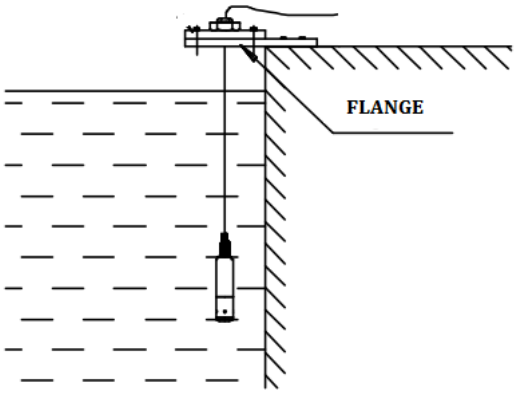

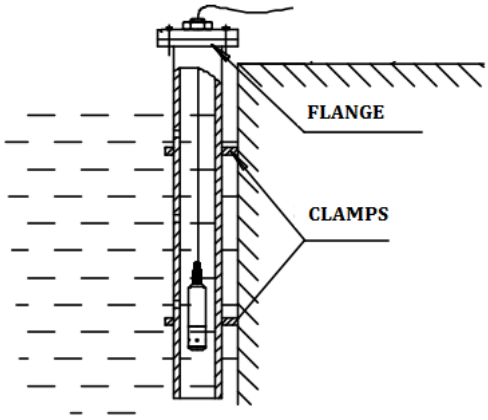

WARNING!!!

If the wick in the drain pipe is removed, the product will be out of warranty.

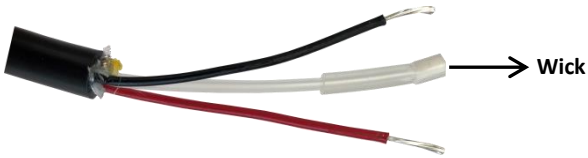

MECHANICAL DIMENSIONS (with standard cap) (in mm)

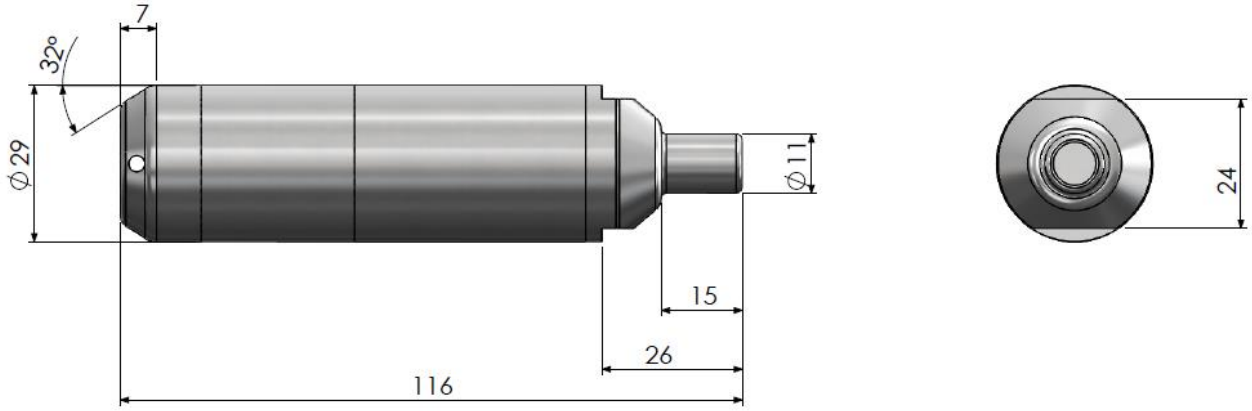

MECHANICAL CONNECTION OPTIONS

Standard Cap

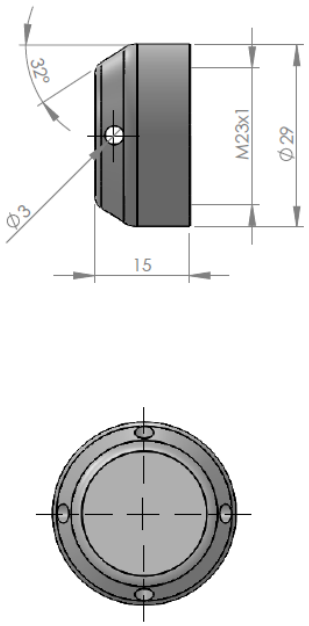

G1/2 Male*

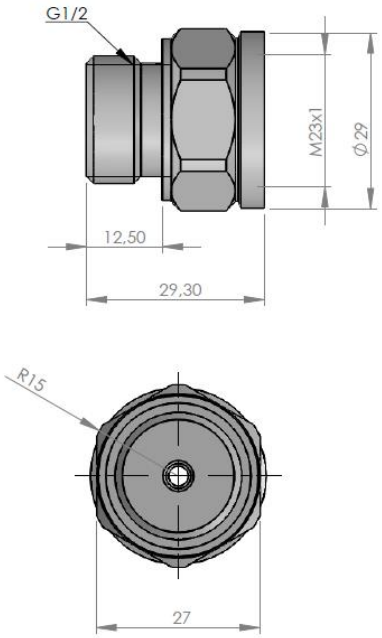

G1/4 Male*

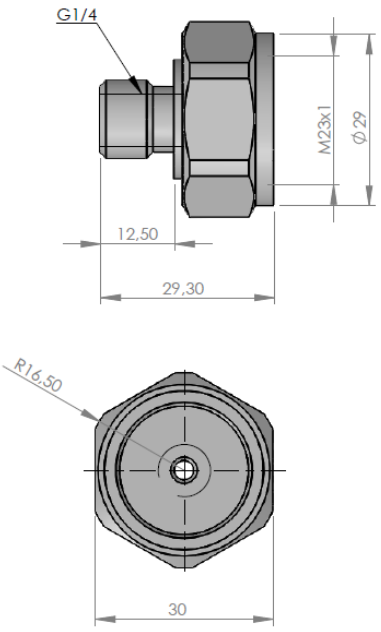

G1 ½ Male*

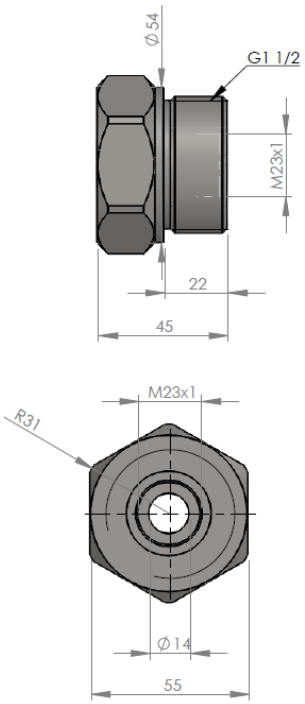

Fittings marked with (*) are optional.

SAMPLE APPLICATION FIELDS

- Wells
- Water Tanks
- Fuel Tanks
- Lake Level
- River Level
- Reservoirs

ORDER CODE

Model

Output Signal

V : 0-10 VDC
A : 4-20 mA

Cable Length

5M : 5 meters
8M : 8 meters
10M: 10 meters
* Must be selected 1 meter above the value to be measured in liquid level measurement

PTL 110	-	X	-	XX	-	XX	-	XX

Pressure

Different models between 100 mbar and 25 bar can be selected

*(For water, 1 meter level = 100 milibar)

Mechanical Connection

No Code : Standard Cap
G1/4 : G1/4 Connection
G1/2 : G1/2 Connection
G1.1/2 : G1 1/2 Connection

Product	Housing	Cable Material	O-Ring	Applications
PTL 110	1.4435 (316L)	PE (polythene)	NBR (standard), EPDM(optional)	General applications
			Viton (FKM) (optional)	Oils and fuels
PTL 120	1.4462 (dublex) (standard)	PE (polythene)	NBR (standard), EPDM(optional)	Sea water, saline water, waste water gray water
	Titanium (optional)		Viton (FKM) (optional)	Special applications

Iran agent

Tel : 021 66 3939 00
Mob : 0912 147 3023
www.IranAtek.ir

Atek Sensor Technologies

Tuzla KOSB Organize Sanayi Bolgesi Melek Aras Bulvari, No:67 34956 Tuzla-İstanbul / TURKEY
Tel: +90 216 399 44 04
Fax: +90 216 399 44 02
www.ateksensor.com
info@ateksensor.com